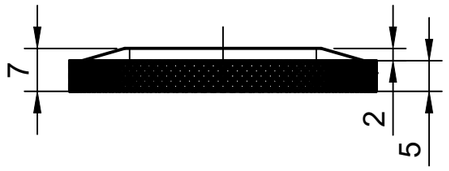

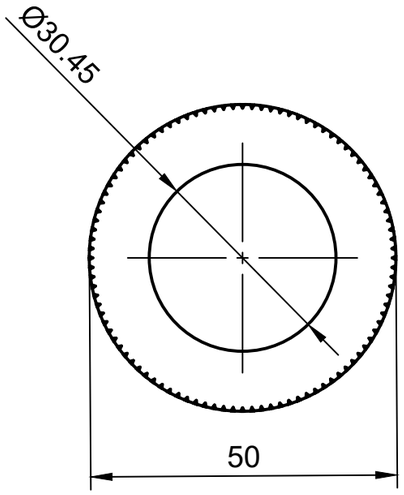

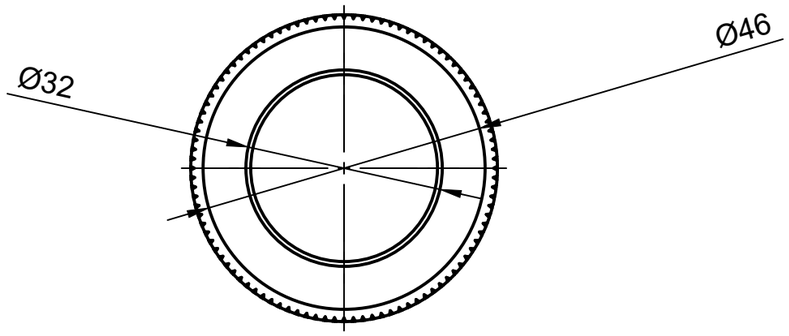

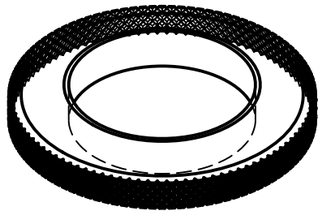

Dept.	Technical reference	Created by	Approved by
Chemistry		Kathryn Day 4/12/2026	C. J. Abelt 4/15/2026
		Document type: Technical Drawing	Document status: Final Revision
		Title: Peak_Tracker	DWG No.
			Rev. 1 / Date of issue 4/17/2026 / Sheet 1/1